HMS Series

Orbital Hydraulic Motors

Features

- General Purpose Motors
- Maximum Oil Temp.: 180ºF (82ºC)
- Seven precision machined rollers provide rolling contact support. Rollers reduce friction for increased efficiency & extended motor life.

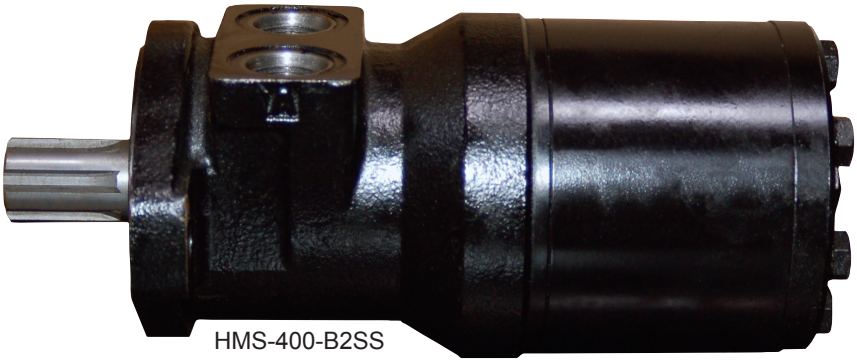

HMS-400-B2SS

Technical Data

TYPE		HMS050	HMS080	HMS160	HMS200	HMS250	HMS315	HMS400
Displacement: in3./ rev.		3.15	4.91	9.80	12.25	15.41	19.62	24.52
Maximum Speed: rpm	cont.	775	750	375	300	240	185	150
Maximum Torque: in/ lbs	cont.	823	1345	2743	3266	3363	3363	3363
	int.	1044	1673	3346	3983	4160	4160	4160
Maximum Pressure: psi	cont.	2031	2031	2031	2031	1595	1305	1015
	int.	2538	2538	2538	2538	2031	1595	1305
Maximum Flow: gpm	cont.	10.6	15.9	15.9	15.9	15.9	15.9	15.9
Maximum Output: hp	cont.	9	13	13	11	8	6.7	5
Weight: lbs (kgs)		14 (6.35)	15 (6.80)	17 (7.71)	18 (8.17)	19 (8.62)	19.8 (9.0)	24 (10.89)

Dimensional Data

Units: mm (inches)

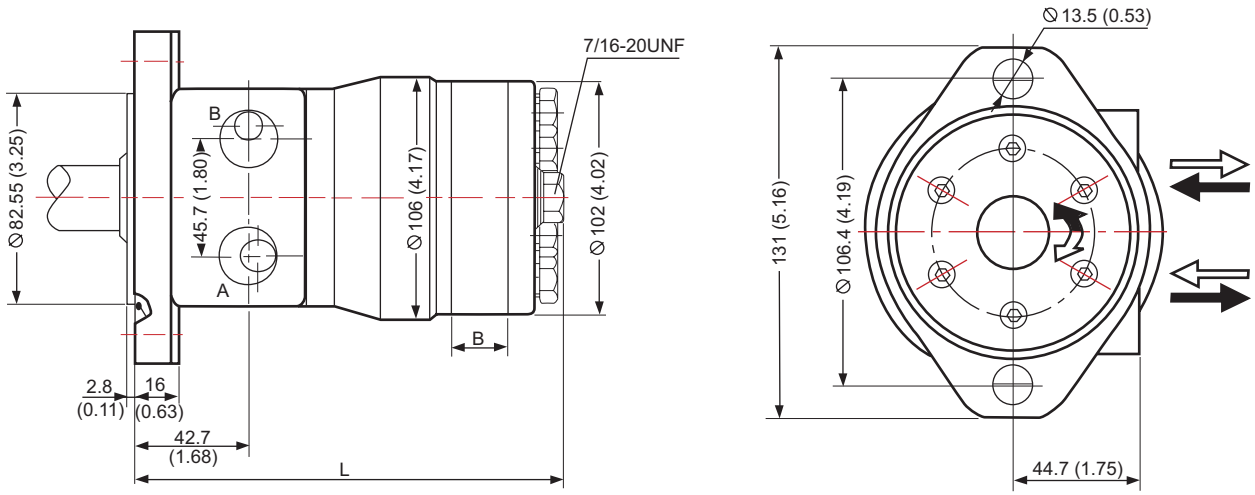

TYPE	HMS 050	HMS 080	HMS 160	HMS 200	HMS 250	HMS 315	HMS 400
L	151.0 (5.94)	156.0 (6.14)	170.0 (6.69)	177.0 (6.97)	186.0 (7.32)	198.0 (7.80)	212.0 (8.35)
B	8.9 (0.35)	14.0 (0.55)	27.9 (1.10)	35.1 (1.38)	55.9 (2.20)	70.1 (2.76)	70.1 (2.76)

31341 Friendship Drive, Magnolia, TX 77355 • Tel.: 281-259-7768 Fax: 281-259-7249 • www.hyvair.com

Performance Curves

HMS050

HMS50 51.7 cm³/r (3.15 in³/r)

PRESSURE PSI (BAR) →	725 (50)	1015 (70)	1305 (90)	1450 (100)	1740 (120)	2030 (140) MAX CONT.	2320 (160)	2538 (175) MAX INT.
	TORQUE in-ibf (Nm) SPEED SPECIFICATION							
FLOW GPM (LPM) 1.32 (5)	300 (34) 94 rpm	389 (44) 85 rpm	513 (58) 77 rpm	575 (65) 77 rpm	663 (75) 72 rpm	778 (88) 50 rpm		
2.64 (10)	309 (35) 188 rpm	398 (45) 179 rpm	539 (61) 167 rpm	601 (68) 163 rpm	699 (79) 154 rpm	831 (94) 137 rpm	947 (107) 119 rpm	1053 (119) 98 rpm
3.96 (15)	300 (34) 285 rpm	424 (48) 279 rpm	548 (62) 271 rpm	637 (72) 263 rpm	770 (87) 252 rpm	885 (100) 232 rpm	955 (108) 213 rpm	1079 (122) 187 rpm
5.28 (20)	300 (34) 379 rpm	407 (46) 377 rpm	531 (60) 367 rpm	601 (68) 363 rpm	725 (82) 348 rpm	840 (95) 332 rpm	964 (109) 304 rpm	1106 (125) 272 rpm
7.93 (30)	283 (32) 578 rpm	380 (43) 571 rpm	522 (59) 563 rpm	584 (66) 556 rpm	699 (79) 544 rpm	831 (94) 533 rpm	947 (107) 502 rpm	1070 (121) 467 rpm
MAX CONT. 10.57 (40)	265 (30) 762 rpm	354 (40) 760 rpm	504 (57) 755 rpm	575 (65) 752 rpm	690 (78) 740 rpm	805 (91) 726 rpm	929 (105) 702 rpm	1062 (120) 672 rpm
11.89 (45)	256 (29) 858 rpm	345 (39) 855 rpm	495 (56) 851 rpm	566 (64) 847 rpm	681 (77) 837 rpm	787 (89) 817 rpm	920 (104) 798 rpm	1062 (120) 772 rpm
MAX INT. 13.21 (50)	221 (25) 952 rpm	318 (36) 942 rpm	460 (52) 927 rpm	522 (59) 908 rpm	637 (72) 882 rpm	743 (84) 854 rpm	867 (98) 834 rpm	1000 (113) 803 rpm

HMS080

HMS80 80.5 cm³/r (4.91 in³/r)

PRESSURE: PSI (BAR) →	725 (50)	1015 (70)	1305 (90)	1450 (100)	1740 (120)	2030 (140) MAX CONT.	2320 (160)	2538 (175) MAX INT.
	TORQUE: in-ibf (Nm) SPEED SPECIFICATION							
FLOW: GPM (LPM) 1.32 (5)	424 (48) 61 rpm	513 (58) 58 rpm	743 (84) 52 rpm	938 (106) 46 rpm	1141 (129) 40 rpm			
2.64 (10)	442 (50) 122 rpm	654 (74) 116 rpm	849 (96) 112 rpm	938 (106) 108 rpm	1115 (126) 106 rpm	1283 (145) 99 rpm	1504 (170) 60 rpm	
5.28 (20)	477 (54) 243 rpm	672 (76) 239 rpm	885 (100) 231 rpm	964 (109) 219 rpm	1159 (131) 206 rpm	1345 (152) 192 rpm	1540 (174) 176 rpm	1708 (193) 152 rpm
7.93 (30)	442 (50) 362 rpm	637 (72) 358 rpm	849 (96) 356 rpm	920 (104) 350 rpm	1132 (128) 349 rpm	1309 (148) 335 rpm	1522 (172) 325 rpm	1690 (191) 300 rpm
10.57 (40)	398 (45) 484 rpm	619 (70) 480 rpm	840 (95) 478 rpm	920 (104) 476 rpm	1106 (125) 470 rpm	1229 (146) 468 rpm	1513 (171) 440 rpm	1663 (188) 438 rpm
13.21 (50)	362 (41) 610 rpm	601 (68) 608 rpm	805 (91) 606 rpm	893 (101) 603 rpm	1079 (122) 600 rpm	1283 (145) 598 rpm	1486 (168) 550 rpm	1646 (186) 520 rpm
MAX CONT. 15.85 (60)	309 (35) 726 rpm	575 (65) 723 rpm	778 (88) 720 rpm	849 (96) 718 rpm	1062 (120) 710 rpm	1256 (142) 700 rpm	1451 (164) 698 rpm	1610 (182) 680 rpm
18.49 (70)	265 (30) 845 rpm	513 (58) 834 rpm	716 (81) 820 rpm	823 (93) 802 rpm	1008 (114) 789 rpm	1203 (136) 767 rpm	1398 (158) 754 rpm	1548 (175) 730 rpm
MAX INT. 19.81 (75)	168 (19) 910 rpm	424 (48) 895 rpm	672 (76) 881 rpm	778 (88) 867 rpm	955 (108) 852 rpm	1168 (132) 830 rpm	1336 (151) 806 rpm	1486 (168) 787 rpm

Performance Curves

HMS160

HMS160: 160.8 cm³/r (9.81 in³/r)

PRESSURE: PSI (BAR) →	725 (50)	1015 (70)	1305 (90)	1450 (100)	1740 (120)	2030 (140) MAX CONT.	2320 (160)	2538 (175) MAX INT.
	TORQUE: in-ibf (Nm) SPEED SPECIFICATION							
FLOW: GPM (LPM) 1.32 (5)	885 (100) 29 rpm	1256 (142) 26 rpm	1663 (188) 21 rpm	1832 (207) 19 rpm				
2.64 (10)	920 (104) 62 rpm	1229 (146) 60 rpm	1690 (191) 58 rpm	1867 (211) 49 rpm	2168 (245) 45 rpm	2495(282) 32 rpm	2920(330) 25 rpm	
5.28 (20)	902 (102) 124 rpm	1309 (148) 120 rpm	1717 (194) 118 rpm	1929 (218) 114 rpm	2221 (251) 109 rpm	2566 (290) 104 rpm	2991 (338) 99 rpm	3257 (368) 94 rpm
7.93 (30)	849 (96) 183 rpm	1247 (141) 181 rpm	1646 (186) 179 rpm	1902 (215) 176 rpm	2194 (248) 166 rpm	2549 (288) 158 rpm	2965 (335) 144 rpm	3221 (364) 132 rpm
10.57 (40)	770 (87) 246 rpm	1203 (136) 242 rpm	1593 (180) 240 rpm	1823 (206) 235 rpm	2194 (248) 231 rpm	2531 (286) 219 rpm	2920 (330) 200 rpm	3168 (358) 181 rpm
13.21 (50)	619 (70) 309 rpm	1115 (126) 307 rpm	1522 (172) 300 rpm	1752 (198) 295 rpm	2106 (238) 287 rpm	2460 (278) 278 rpm	2832 (320) 262 rpm	3097 (350) 247 rpm
MAX CONT. 15.85 (60)	513 (58) 371 rpm	982 (111) 367 rpm	1486 (168) 359 rpm	1690 (191) 354 rpm	2053 (232) 346 rpm	2398 (271) 338 rpm	2761 (312) 323 rpm	3026 (342) 306 rpm
18.49 (70)	415 (47) 435 rpm	920 (104) 430 rpm	1416 (160) 421 rpm	1681 (190) 415 rpm	2017 (228) 403 rpm	2363 (267) 393 rpm	2664 (301) 381 rpm	2991 (338) 365 rpm
MAX INT. 19.81 (75)	300 (34) 470 rpm	805 (91) 463 rpm	1327 (150) 450 rpm	1593 (180) 441 rpm	1956 (221) 431 rpm	2310 (261) 420 rpm	2575 (291) 405 rpm	2903 (328) 389 rpm

HMS200

HMS200: 200 cm³/r (12.25 in³/r)

PRESSURE: PSI (BAR) →	725 (50)	1015 (70)	1305 (90)	1450 (100)	1740 (120)	2030 (140) MAX CONT.	2320 (160)	2538 (175) MAX INT.
	TORQUE: in-ibf (Nm) SPEED SPECIFICATION							
FLOW: GPM (LPM) 1.32 (5)	1141 (129) 24 rpm	1557 (176) 22 rpm	2035 (230) 18 rpm	2265 (256) 13 rpm				
2.64 (10)	1177 (133) 49 rpm	1610 (182) 47 rpm	2088 (236) 45 rpm	2310 (261) 43 rpm	2743 (310) 38 rpm	3115 (352) 33 rpm	3540 (400) 24 rpm	
5.28 (20)	1159 (131) 99 rpm	1601 (181) 97 rpm	2053 (232) 94 rpm	2265 (256) 92 rpm	2726 (308) 88 rpm	3133 (354) 83 rpm	3540 (400) 74 rpm	3814 (431) 64 rpm
7.93 (30)	1115 (126) 149 rpm	1557 (176) 147 rpm	2646 (299) 144 rpm	22320(252) 141 rpm	2726 (308) 135 rpm	3124 (353) 126 rpm	3540 (400) 113 rpm	3805 (430) 105 rpm
10.57 (40)	991 (112) 200 rpm	1486 (168) 197 rpm	1982 (224) 194 rpm	2194 (248) 191 rpm	2690 (304) 185 rpm	3097 (350) 174 rpm	3478 (393) 160 rpm	3743 (423) 151 rpm
13.21 (50)	831 (94) 252 rpm	1363 (154) 249 rpm	1947 (220) 246 rpm	2150 (243) 243 rpm	2602 (294) 238 rpm	3035 (343) 228 rpm	3398 (384) 212 rpm	3664 (414) 194 rpm
MAX CONT. 15.85 (60)	690 (78) 304 rpm	1274 (144) 301 rpm	1885 (213) 298 rpm	2088 (236) 294 rpm	2540 (287) 286 rpm	3000 (339) 276 rpm	3380 (382) 262 rpm	3628 (410) 243 rpm
18.49 (70)	593 (67) 355 rpm	1194 (135) 353 rpm	1823 (206) 349 rpm	2017 (228) 340 rpm	2451 (277) 329 rpm	2973 (336) 316 rpm	3319 (375) 300 rpm	3611 (408) 288 rpm
MAX INT. 19.81 (75)	513 (58) 382 rpm	1106 (125) 379 rpm	1743 (197) 373 rpm	1947 (220) 362 rpm	2389 (270) 350 rpm	2841 (321) 337 rpm	3186 (360) 322 rpm	3522 (398) 312 rpm

Performance Curves

HMS250

HMS250: 253 cm³/r (15.41 in³/r)

PRESSURE: PSI (BAR) →	725 (50)	1015 (70)	1305 (90)	1450 (100)	1595 (110) MAX CONT.	1740 (120)	2030 (140) MAX INT.
FLOW: GPM (LPM)	TORQUE: in-ibf (Nm) SPEED SPECIFICATION						
1.32 (5)	1522 (172) 20 rpm	2124 (240) 19 rpm	2655 (300) 18 rpm	2991 (338) 16 rpm	3115 (352) 15 rpm		
2.64 (10)	1531 (173) 42 rpm	2141 (242) 38 rpm	2726 (308) 36 rpm	3009 (340) 33 rpm	3106 (351) 33 rpm	3584 (405) 28 rpm	4089 (462) 22 rpm
5.28 (20)	1504 (170) 79 rpm	2106 (238) 77 rpm	2664 (301) 75 rpm	3000 (339) 72 rpm	3097 (350) 71 rpm	3558 (402) 69 rpm	4071 (460) 61 rpm
7.93 (30)	1416 (160) 117 rpm	2044 (231) 114 rpm	2637 (298) 111 rpm	2920 (330) 109 rpm	3071 (347) 108 rpm	3522 (398) 103 rpm	4027 (455) 95 rpm
10.57 (40)	1247 (141) 157 rpm	1956 (221) 155 rpm	2637 (298) 153 rpm	2894 (327) 150 rpm	3026 (342) 148 rpm	3487 (394) 146 rpm	3938 (445) 135 rpm
13.21 (50)	1079 (122) 196 rpm	1823 (206) 193 rpm	2540 (287) 190 rpm	2841 (321) 177 rpm	2938 (332) 175 rpm	3380 (382) 170 rpm	3876 (438) 163 rpm
MAX CONT. 15.85 (60)	893 (101) 236 rpm	1681 (190) 233 rpm	2460 (278) 230 rpm	2761 (312) 227 rpm	2903 (328) 225 rpm	2165 (369) 221 rpm	3752 (424) 208 rpm
18.49 (70)	761 (86) 276 rpm	1557 (176) 273 rpm	2318 (262) 270 rpm	2637 (298) 266 rpm	2672 (302) 264 rpm	3124 (353) 255 rpm	3681 (416) 245 rpm
MAX INT. 19.81 (75)	531 (60) 297 rpm	1442 (163) 294 rpm	2248 (254) 290 rpm	2531 (286) 286 rpm	2575 (291) 282 rpm	3053 (345) 277 rpm	3628 (410) 266 rpm

HMS315

HMS315: 321.5 cm³/r (19.62in³/r)

PRESSURE: PSI (BAR) →	435 (30)	725 (50)	1015 (70)	1305 (90) MAX CONT.	1450 (100)	1595(110) MAX INT.
FLOW: GPM (LPM)	TORQUE: in-ibf (Nm) SPEED SPECIFICATION					
1.32 (5)	973 (110) 14 rpm	1761 (199) 12 rpm				
2.64 (10)	955 (108) 31 rpm	1681 (190) 30 rpm	2407 (272) 29 rpm	3186 (360) 28 rpm	3540 (400) 26 rpm	3991 (451) 25 rpm
5.28 (20)	973 (110) 61 rpm	1734 (196) 60 rpm	2469 (279) 59 rpm	3150 (356) 57 rpm	3522 (398) 55 rpm	3965 (448) 53 rpm
7.93 (30)	938 (106) 91 rpm	1646 (186) 90 rpm	2389 (270) 89 rpm	3142 (355) 86 rpm	3451 (390) 84 rpm	3912 (442) 82 rpm
10.57 (40)	885 (100) 123 rpm	1584 (179) 122 rpm	2318 (262) 120 rpm	3079 (350) 117 rpm	3380 (382) 112 rpm	3858 (436) 110 rpm
13.21 (50)	814 (92) 154 rpm	1495 (169) 153 rpm	2230 (252) 151 rpm	3026 (342) 147 rpm	3301 (373) 140 rpm	3823 (432) 136 rpm
MAX CONT. 15.85 (60)	761 (86) 185 rpm	1407 (159) 184 rpm	2133 (241) 182 rpm	3000 (339) 177 rpm	3265 (369) 172 rpm	3788 (428) 170 rpm
18.49 (70)	681 (77) 217 rpm	1292 (146) 216 rpm	2079 (235) 213 rpm	2867 (324) 208 rpm	3026 (342) 201 rpm	3646 (412) 200 rpm
MAX INT. 19.81 (75)	584 (66) 232 rpm	1168 (132) 231 rpm	1876 (212) 228 rpm	2681 (303) 222 rpm	2938 (332) 216 rmp	3558 (402) 214 rpm

Performance Curves

HMS400

HMS400: 401.8 cm³/r (24.52 in³/r)

PRESSURE: PSI (BAR) →		435 (30)	580 (40)	870 (60)	1015 (70) MAX CONT.	1160 (80)	1305 (90) MAX INT.
		TORQUE: in-ibf (Nm) SPEED SPECIFICATION					
FLOW: GPM (LPM)	1.32 (5)	1345 (152) 12 rpm					
	2.64 (10)	1363 (154) 24 rpm	1814 (205) 21 rpm	2726 (308) 18 rpm	3088 (349) 17 rpm		
	5.28 (20)	1327 (150) 49 rpm	1779 (201) 48 rpm	2672 (302) 47 rpm	3009 (340) 46 rpm	3469 (392) 44 rpm	3903 (441) 41 rpm
	7.93 (30)	1292 (146) 73 rpm	1752 (198) 74 rpm	2619 (296) 73 rpm	2929 (331) 72 rpm	3425 (387) 70 rpm	3876 (438) 67 rpm
	10.57 (40)	1239 (140) 98 rpm	1690 (191) 97 rpm	2566 (290) 96 rpm	2481 (321) 95 rpm	3372 (381) 94 rpm	3726 (421) 92 rpm
	13.21 (50)	1168 (132) 122 rpm	1610 (182) 121 rpm	2487 (281) 118 rpm	2787 (315) 115 rpm	3327 (376) 112 rpm	3558 (402) 110 rpm
MAX CONT.	15.85 (60)	1132 (128) 146 rpm	1557 (176) 145 rpm	2407 (272) 143 rpm	2761 (312) 140 rpm	3203 (362) 138 rpm	3442 (389) 132 rpm
	18.49 (70)	973 (110) 170 rpm	1513 (171) 168 rpm	2292 (259) 166 rpm	2664 (301) 162 rpm	3018 (341) 160 rpm	3354 (379) 154 rpm
MAX INT.	19.81 (75)	867 (98) 182 rpm	1433 (162) 180 rpm	2053 (232) 178 rpm	2584 (292) 176 rpm	2832 (320) 174 rpm	3150 (356) 170 rpm

Ordering Information

HMS - 050 - B2 K S

HMS Series	Displacement (in3./ rev.)	Mounting Flange	Shaft	Port
Orbital Hydraulic Motor	050 200 080 250 160 315 400	**B2=** SAE-A, 2 Bolt, Pilot 3.25” **B4=** SAE-A, 4 Bolt, Pilot 1.75”	**K=** 1” Straight Key x 1/4” Key **S=** 1” Splined SAE 6B	**S=** 7/8-14 UNF O-Ring **P=** 1/2-14 NPTF

STOCK MOTORS
HMS-050-B4KP
HMS-050-B2KS
HMS-080-B2KP
HMS-160-B2KP
HMS-160-B4KS
HMS-200-B2KS
HMS-250-B2KP
HMS-315-B2KS
HMS-400-B2SS